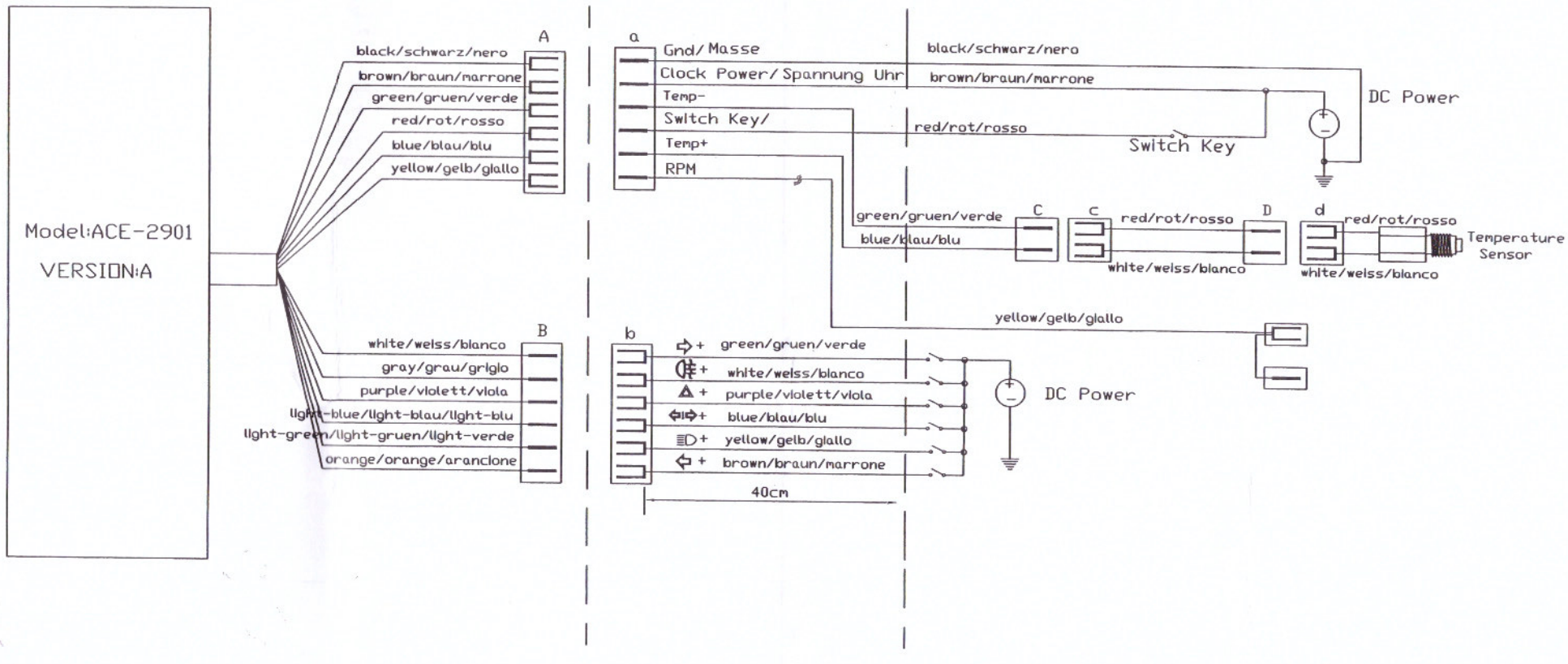

PART NO.	441229010002AR
MODEL NO.	ACE-2901
VERSION	A(2019/5/7)
Tel	+497161/9871639
Fax	+497161/9874458
Mail	info@acewell.de

ACEWELL–Technologies